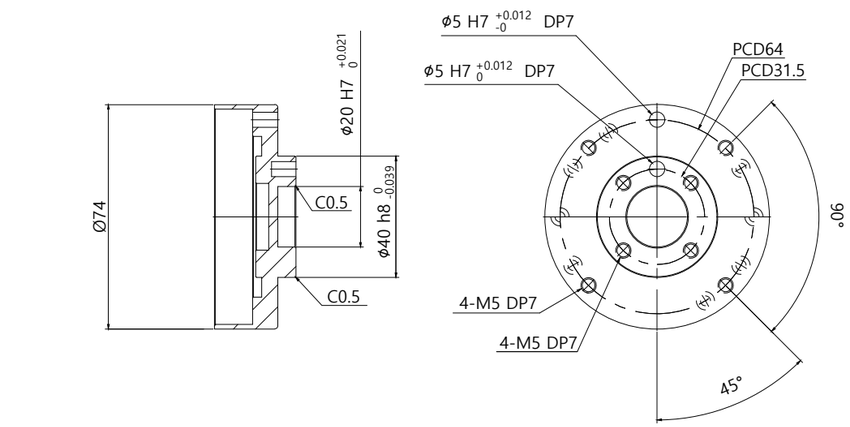

Top Flange

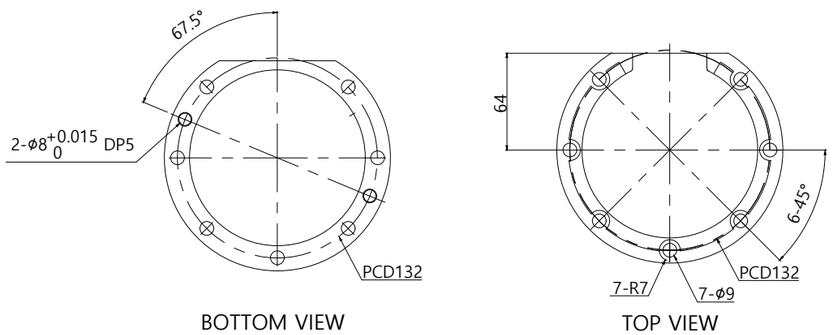

BOTTOM VIEW

TOP VIEW

Bottom Flange

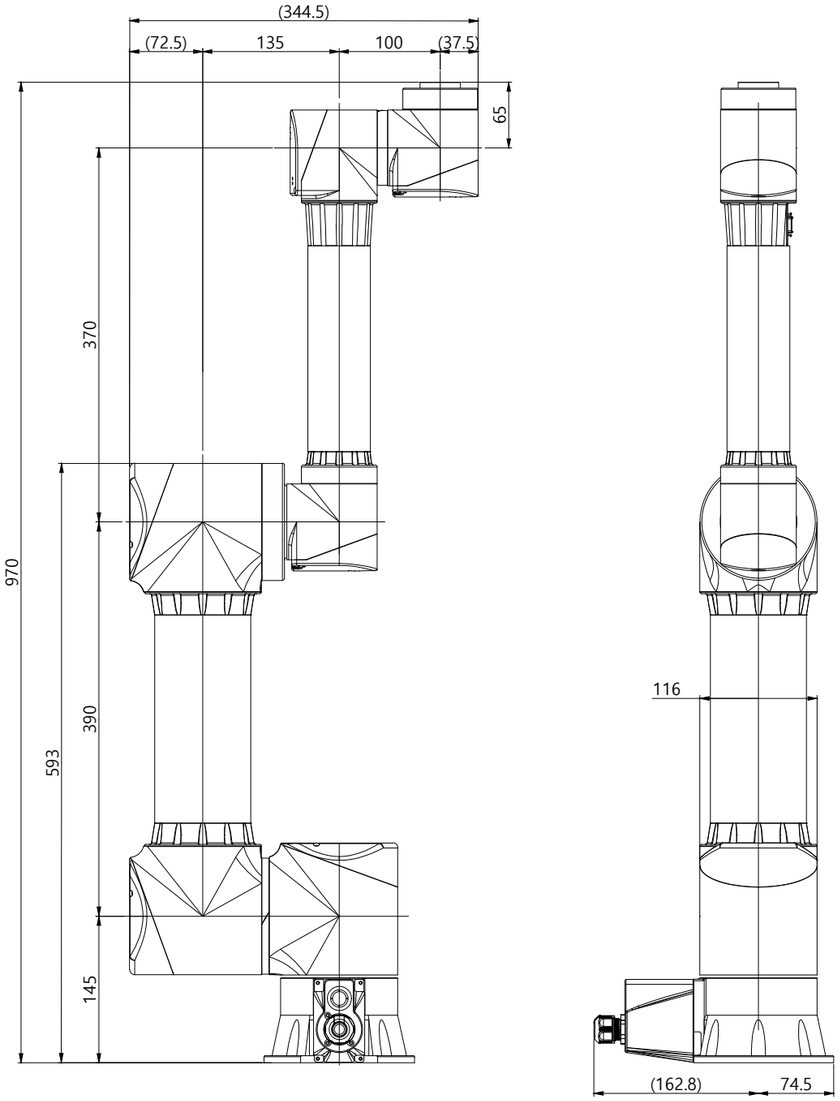

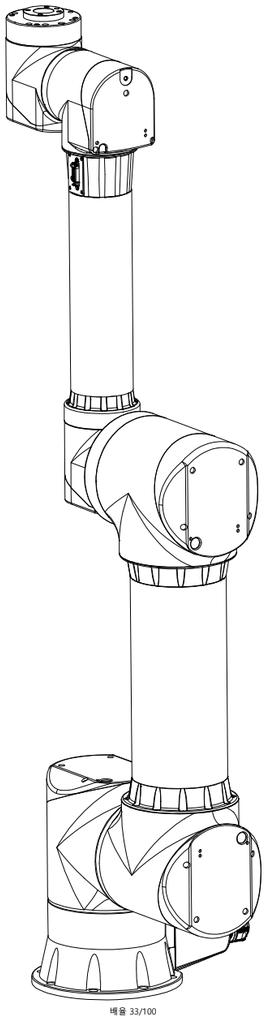

							REF.DRAWING		PROJECT NO.		TITLE		
							PROJECTION	UNIT mm	SCALE 33/100	TOLERANCE KS B ISO 2768-mk	NAME		
							SECTION		ROBOT DEVELOPMENT TEAM		DRAWING NO.		SHEET NO.
SYM.	NO.OF REV.	DESCRIPTION	EC.NO.	DATE	DESIGN	APPR.	APPROVED		CADCHK		ZRA_0508N		1-1
							DESIGNED		CHECKED				

RELEASE OF DRAWING

SHEET

Any unauthorized use of this drawing will be penalized since it's designed by Global ZEUS and its confidential information. (이 도면은 제우스에서 제작된 영업비밀 이므로 무단 사용 시 법적인 처벌을 받을 수 있습니다.)

ZEUS CO.,LTD

A1 (840x594)mm